67120

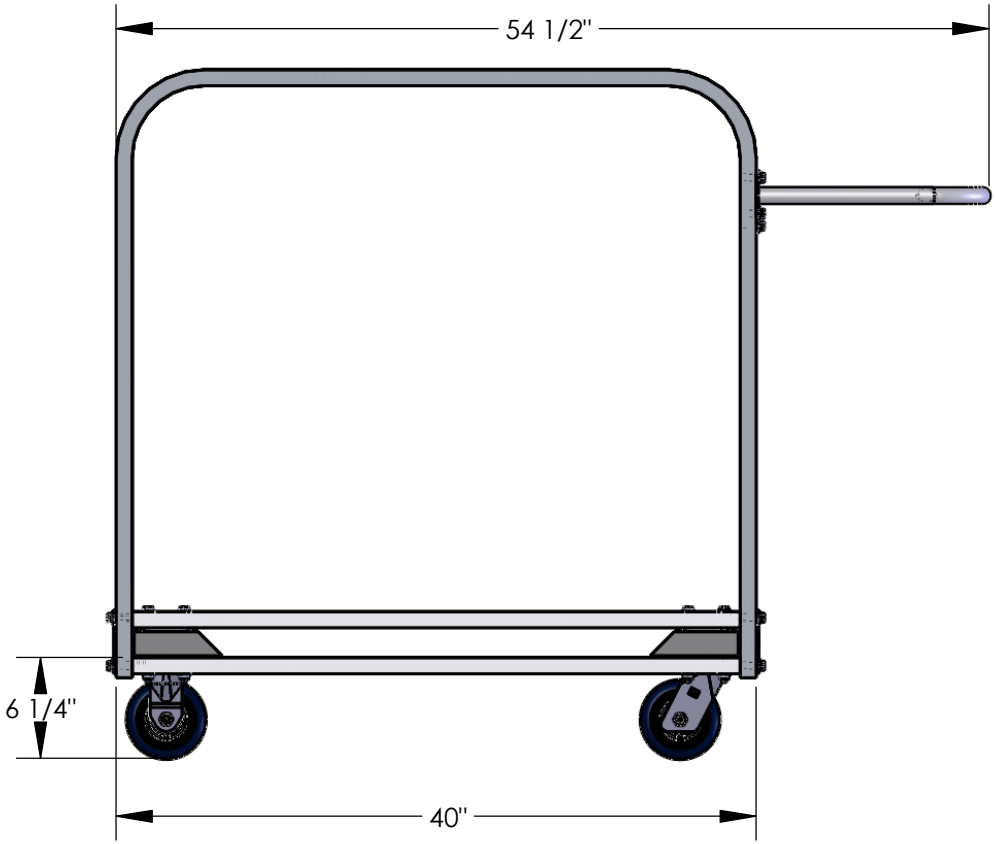

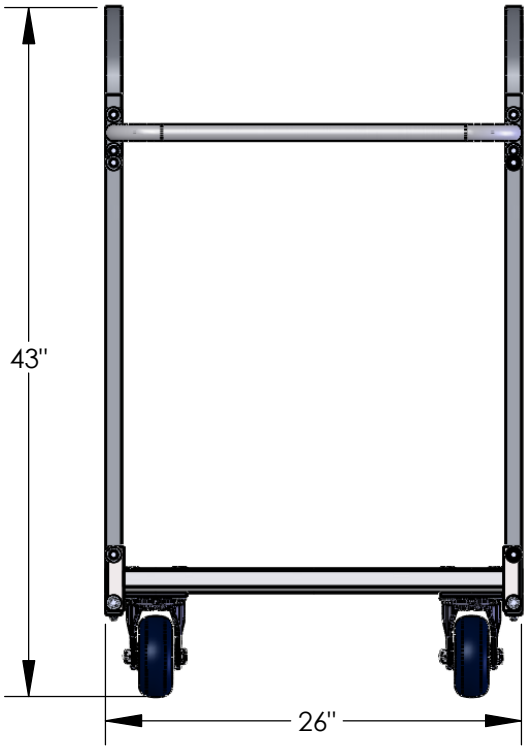

1-877-447-2648
SUPPORT@GRANITEIND.COM

AMERICAN CART & EQUIPMENT
MANUFACTURED BY GRANITE INDUSTRIES